Euro-Locks Sp. z o. o. ul. Pawła 29 41-708 Ruda Śląska
+48 (32) 344-78-70, -82, -84
Fax: +48 (032) 344-78-74

23.5mm Multi Drawer Lock 1346

Product Description

A series of 23.5mm Multi-Drawer Locks in Bright Chrome.

- **Standard movements**: 3, 4
- **Lock Combinations**: 200-500
- **Standard finish**: Bright chrome
- **Fixing hole shape**: Double D
- M Keyed system supplied to order only

Other cam travel, cam and panel thickness available on request – contact us today!

Options

Product Code	Key Series	Combinations	Head Shape	Head Depth	Housing Fixing	Finish	Cam Travel	E Dimension	Body Length	Head Width
1346	92 M	200	Square	5	Snap In Fix	Bright Chrome	19	5	23.5	25.4
F390	9000 M	500	Square	4.5	Snap In Fix	Bright Chrome	15	4.5	23.5	25.4
F535	9000 M	500	Conical	5.8	Snap In Fix	Bright Chrome	15	4.5	23.5	23
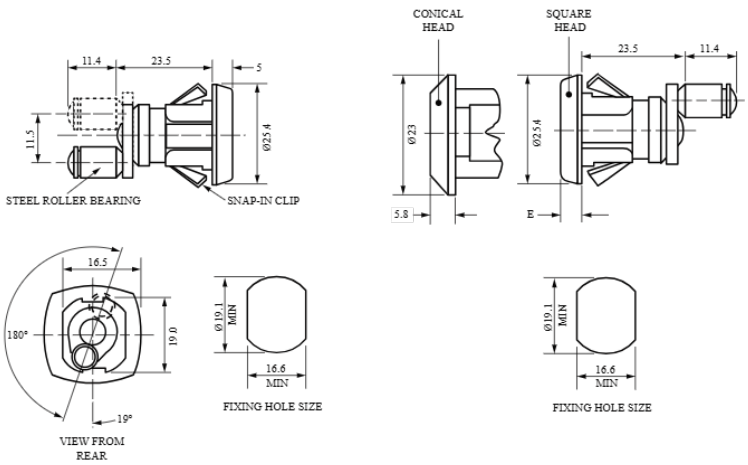
Technical Drawing